San Mateo Smart Corridor

Presentation for

MTC Arterial Operations Committee
05/11/10

Min Yin Lee, Caltrans
David Man, Caltrans

Alternative Routes

- ARTI
- Crossings and Parallel
- Route Criteria
- Not All Routes Used
- Improvements

TOS Equipment Subsystem

- Communication
- Directional Signage
- CCTV
- System Detection

Traffic Controller Subsystem

- Upgrade Traffic Signal Controllers
- State Standard Software will be used for State intersections
- The system software will be chosen to be compatible with local traffic signal firmware

Central System Software

- Operational Requirements
  - Support various operational schemes
  - System Detection
  - IP Based communication with field elements
- Functional Requirements
  - Secure system
  - AB3418E and NTCIP
  - Scalable

Central System Software Cont.

Functional Requirements Continued

- Cross jurisdictional operation
- Signal timing modifications
- Collecting and sharing of traffic data

Additional Benefits

- Day to day operation
- Controller and hardware status
- Incident response
- Sharing traffic data with agencies
- Seasonal traffic signal adjustments
- Special event
- Disaster response

Incident Example

Questions

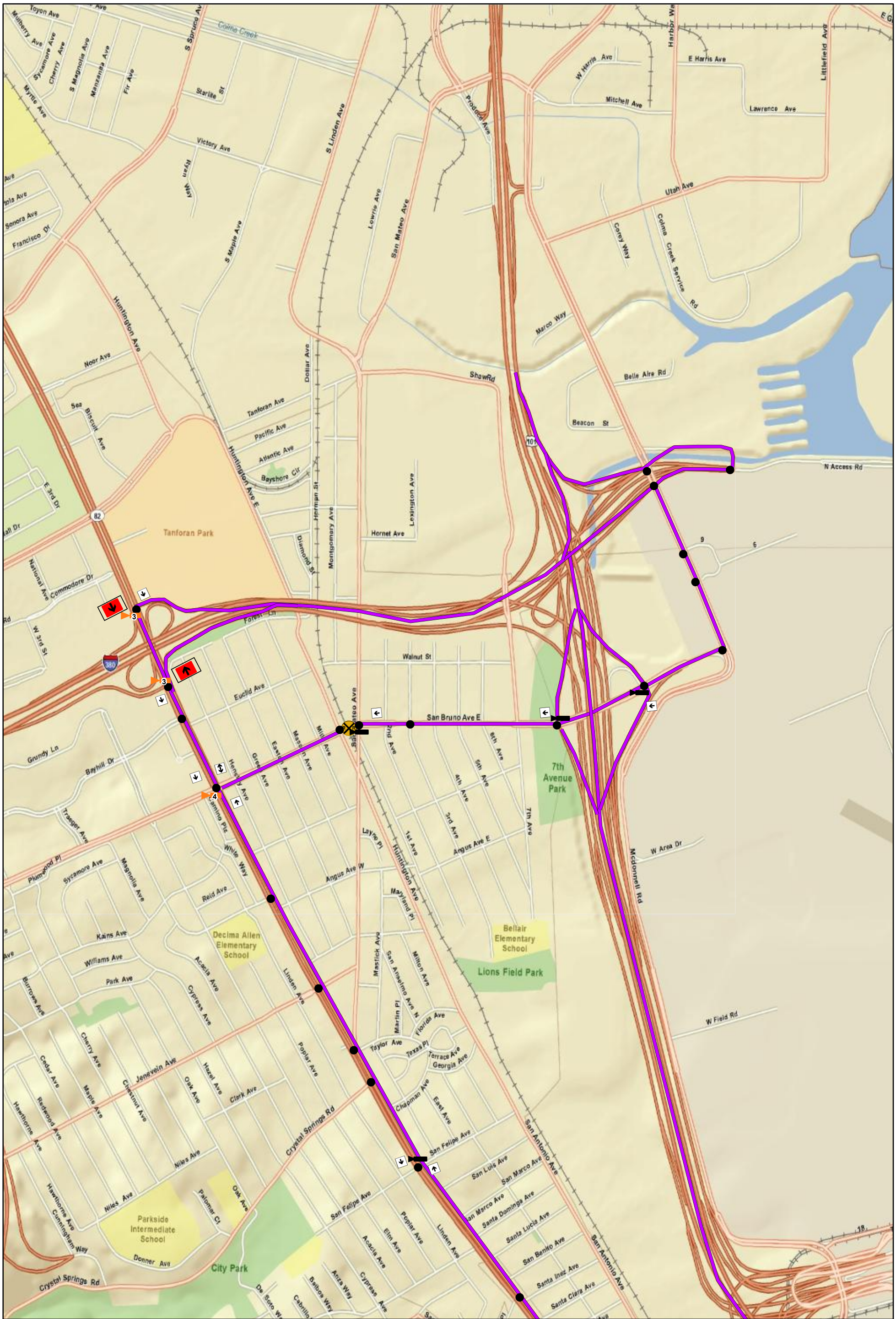

NOT TO SCALE

PTZ Camera

Fixed Camera

Trailblazer Sign

At-Grade Crossing

Dynamic Message Sign

Signalized Intersection

Smart Corridor Alternate Route

San Mateo Smart Corridors
Device Maps

Map No. 1

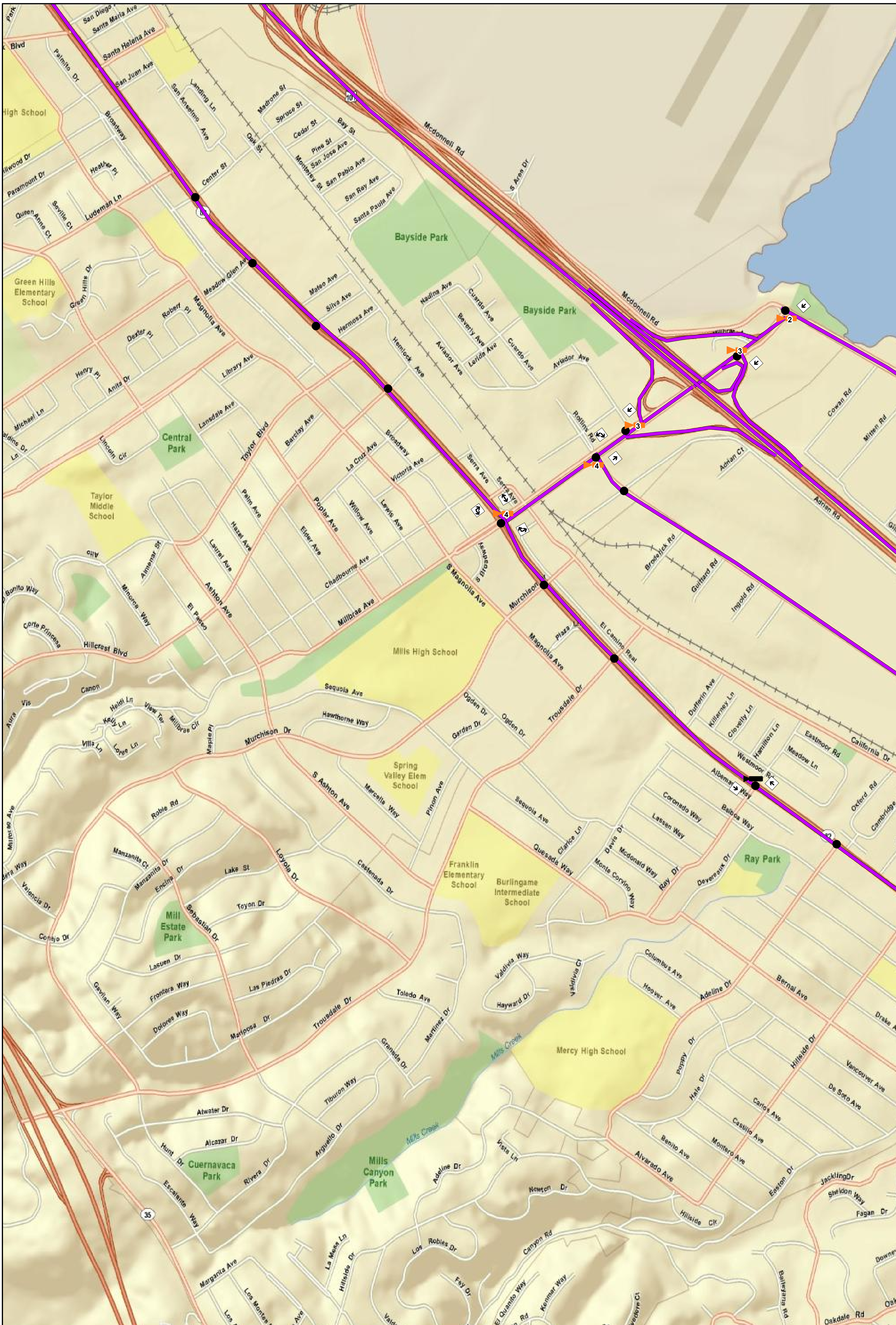

PTZ Camera

Fixed Camera

Trailblazer Sign

At-Grade Crossing

Dynamic Message Sign

Signalized Intersection

Smart Corridor Alternate Route

San Mateo Smart Corridors
Device Maps

Map No. 2

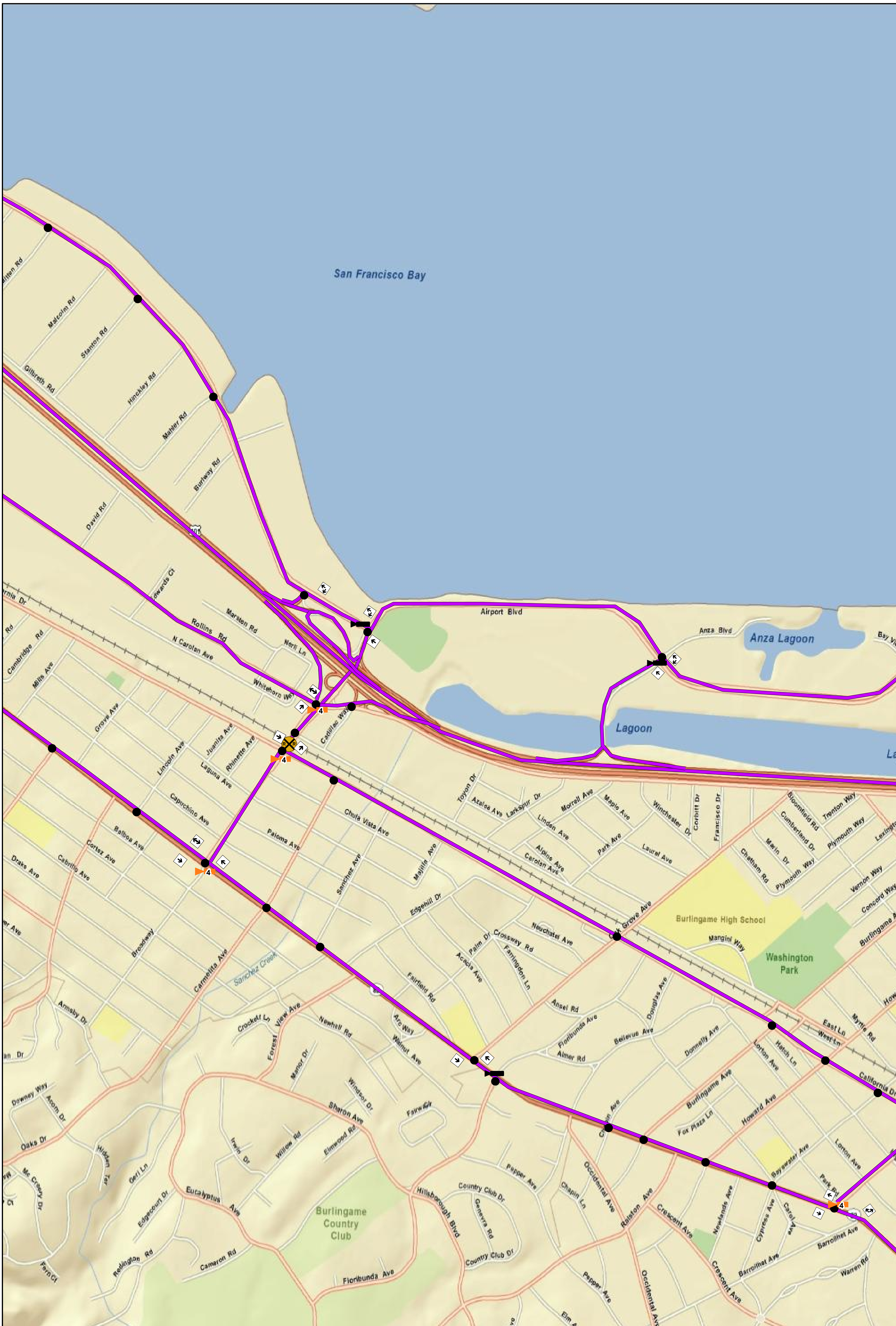

PTZ Camera

Fixed Camera

Trailblazer Sign

At-Grade Crossing

Dynamic Message Sign

Signalized Intersection

Smart Corridor Alternate Route

NOT TO SCALE

San Mateo Smart Corridors
Device Maps

Map No. 3

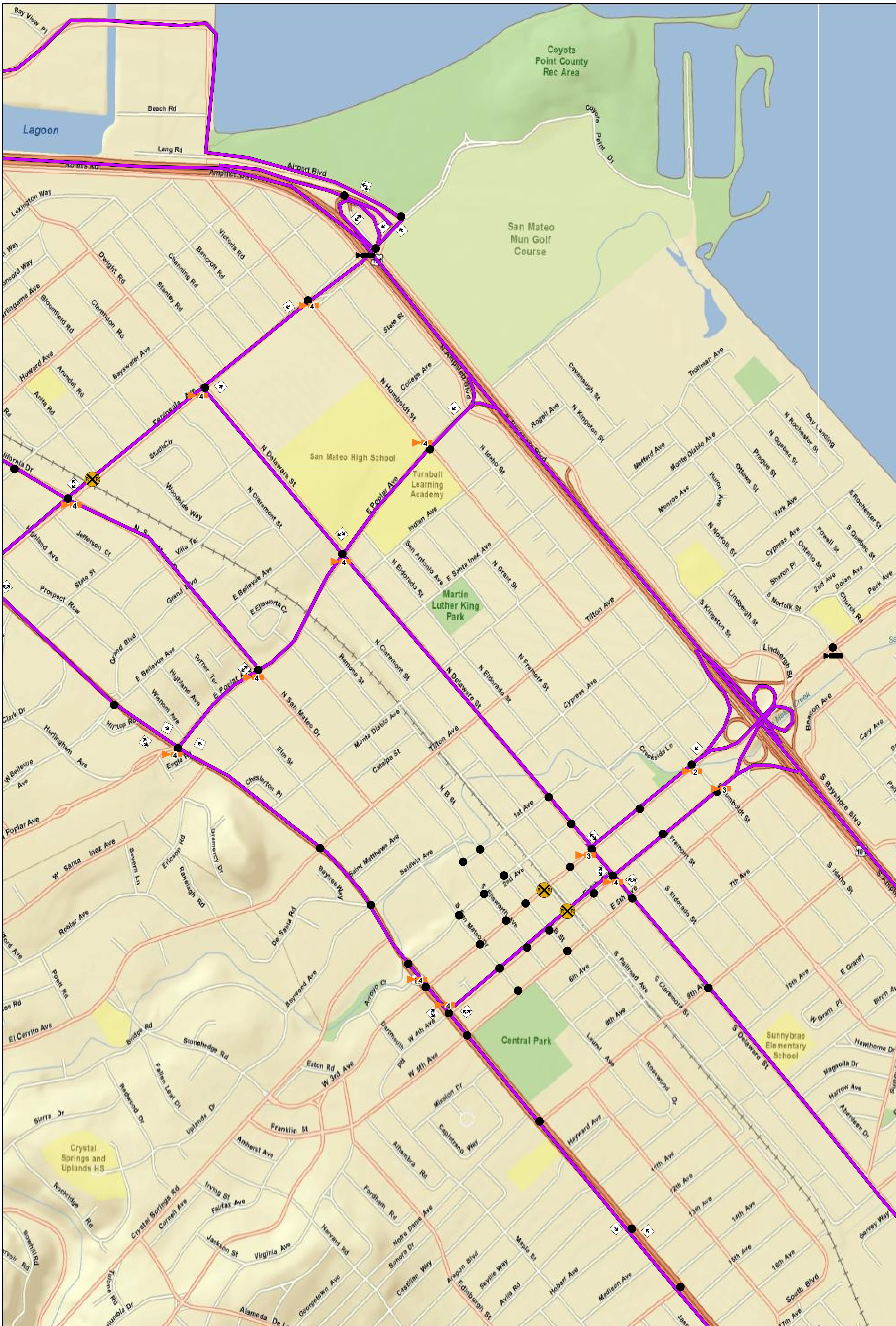

PTZ Camera

Fixed Camera

Trailblazer Sign

At-Grade Crossing

Dynamic Message Sign

Signalized Intersection

Smart Corridor Alternate Route

NOT TO SCALE

San Mateo Smart Corridors
Device Maps

Map No. 4

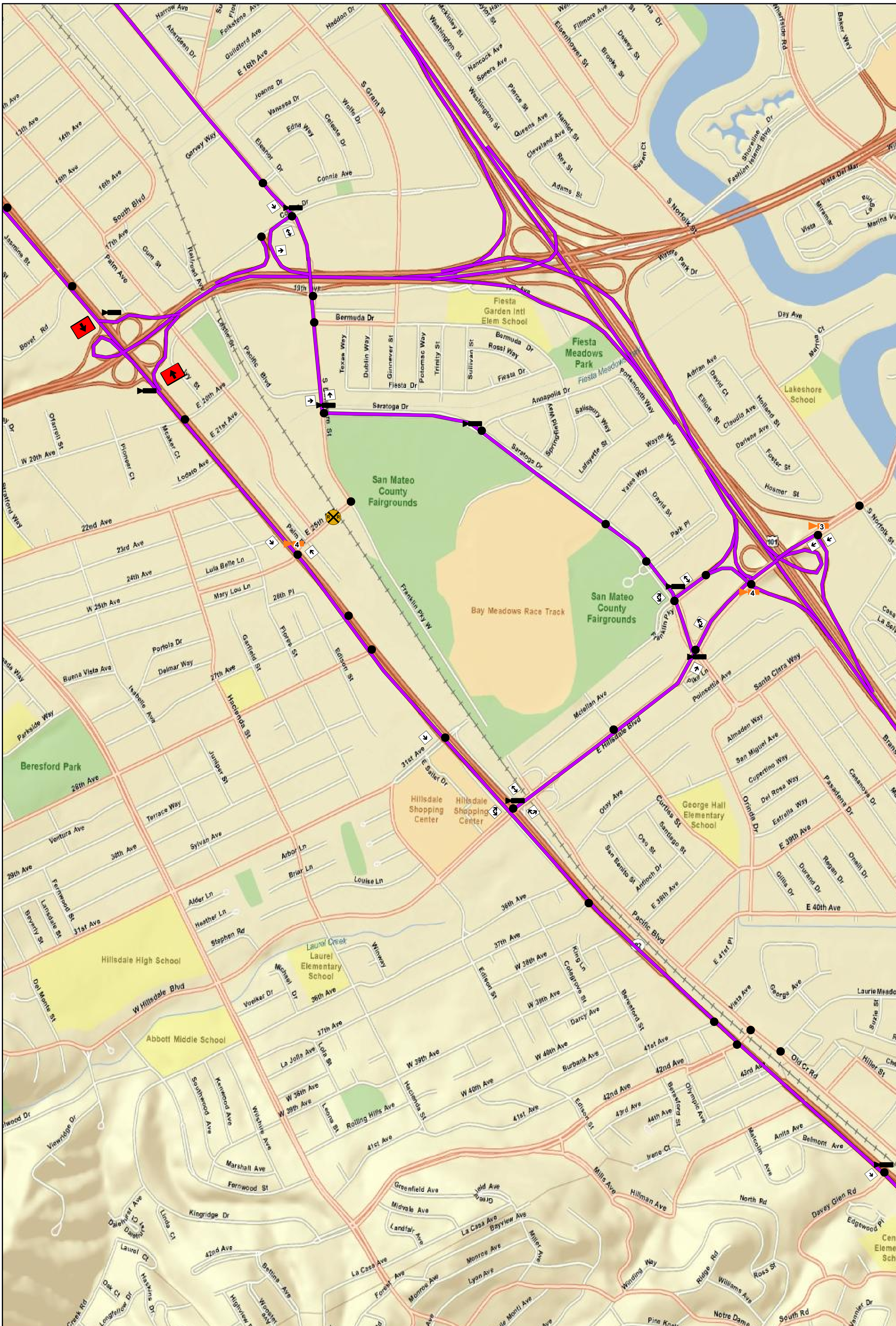

NOT TO SCALE

PTZ Camera

Fixed Camera

Trailblazer Sign

At-Grade Crossing

Dynamic Message Sign

Signalized Intersection

Smart Corridor Alternate Route

San Mateo Smart Corridors
Device Maps

Map No. 5

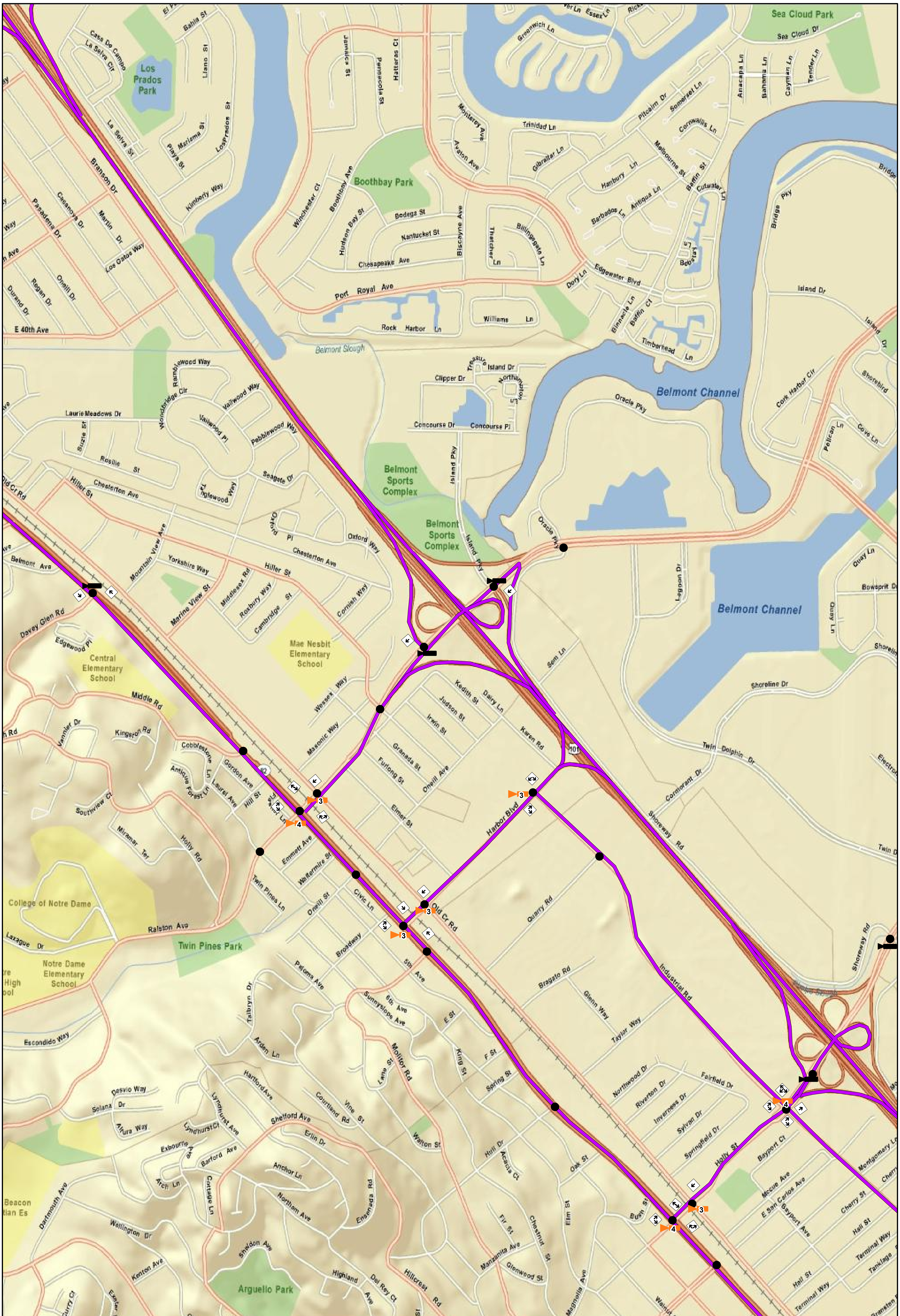

PTZ Camera

Fixed Camera

Trailblazer Sign

At-Grade Crossing

Dynamic Message Sign

Signalized Intersection

Smart Corridor Alternate Route

NOT TO SCALE

San Mateo Smart Corridors
Device Maps

Map No. 6

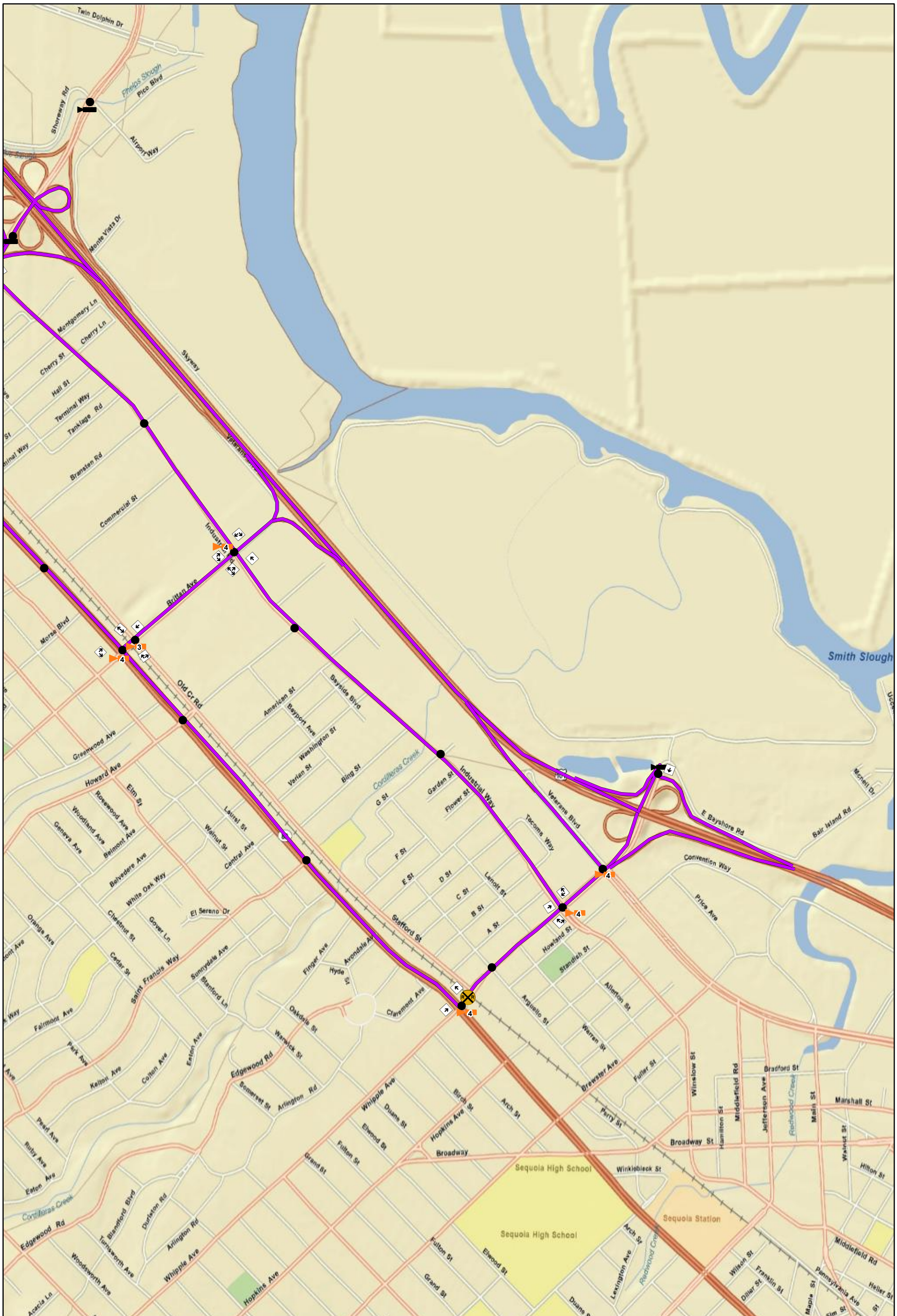

NOT TO SCALE

PTZ Camera

Fixed Camera

Trailblazer Sign

At-Grade Crossing

Dynamic Message Sign

Signalized Intersection

Smart Corridor Alternate Route

San Mateo Smart Corridors
Device Maps

Map No. 7

DWG. NO.	SHEET	REV.
12S–XX0000–01	1 of 1	A

NOTES: UNLESS OTHERWISE SPECIFIED,

1. PART/ASSEMBLY SHALL COMPLY WITH ALL APPLICABLE SKYLINE WORKMANSHIP STANDARDS.
2. DIMENSIONS IN FEET/INCHES.

REVISIONS

ZONE	REV	DESCRIPTION	DATE	APPROVED
	A	PROPOSAL RELEASE,	04/28/10	JMC

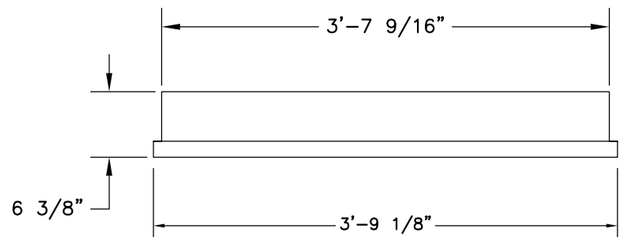

TOP VIEW

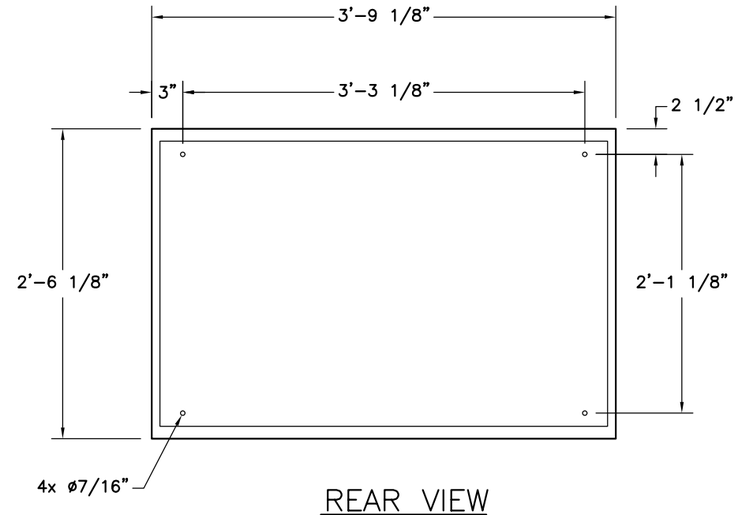

REAR VIEW

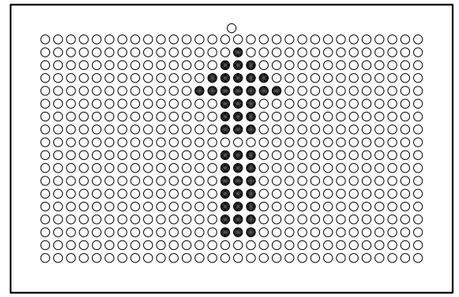

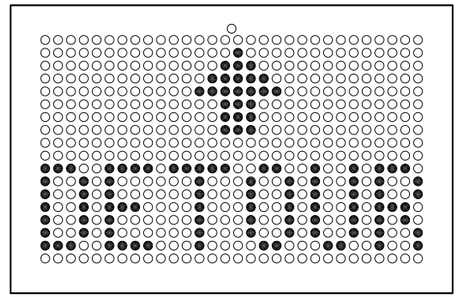

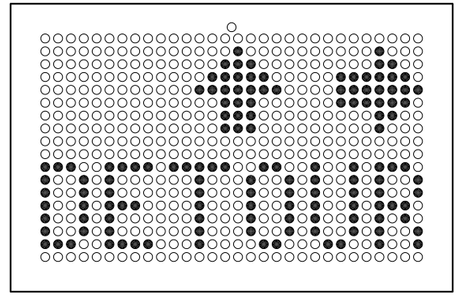

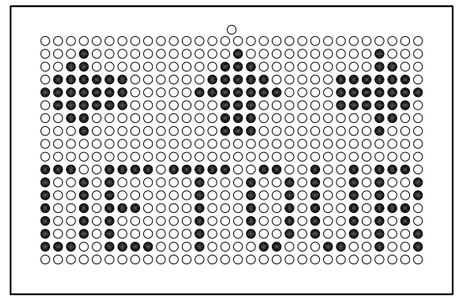

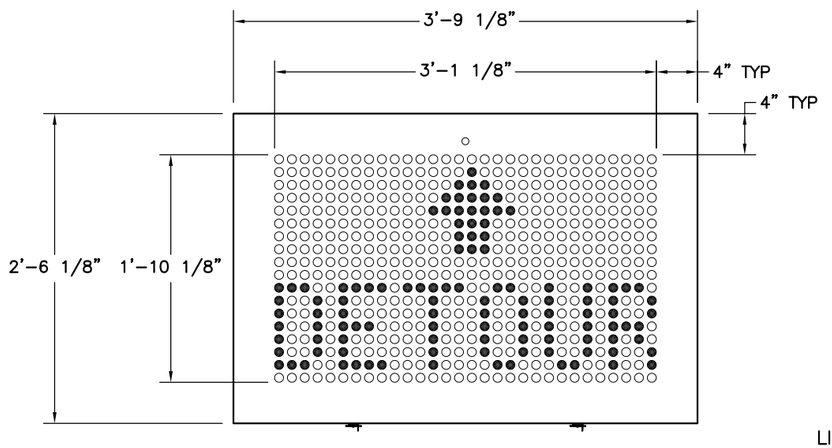

ELEVATION

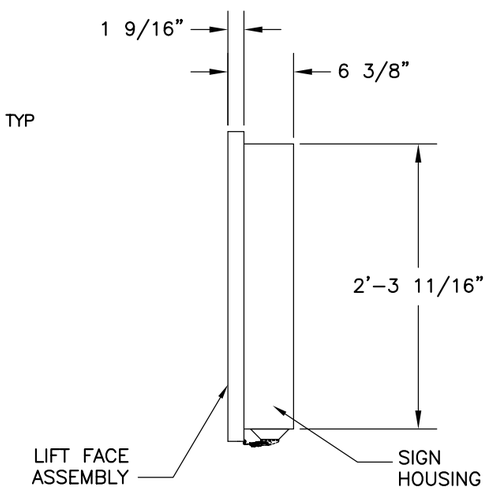

END VIEW

Skyline Model No. VMSLED-L-2-8F-18x030-I

LED VMS
8" FULL MATRIX
18x030

ESTIMATED WEIGHT:
95 lbs.

CONTROL NO:
ITEM NO: LED VMS
DESC. CODE:
SKYLINE PRODUCTS WORK ORDER NO:
PROJECT NO:
HIGHWAY NO:
COUNTY:

TOLERANCES: (UNLESS OTHERWISE SPECIFIED)
X.X ± .1
X.XX ± .02
X.XXX ± .005
ANGLES ±°1

THIS DRAWING/DOCUMENT (AND ALL SUBSEQUENT SHEETS IF ANY) CONTAINS PROPRIETARY INFORMATION EXCLUSIVE TO SKYLINE PRODUCTS, INC. AND SHALL NOT BE USED, REPRODUCED, COPIED, DISCLOSED, OR EXHIBITED IN WHOLE OR IN PART FOR MANUFACTURE, PROCUREMENT OR FOR ANY OTHER PURPOSE EXCEPT AS SPECIFICALLY AUTHORIZED IN WRITING BY SKYLINE PRODUCTS, INC.

APPROVALS		DATE
DRAWN	AKM	04/06/10
CHECKED	JMC	04/06/10
ENGINEER		

SKYLINE PRODUCTS, INC.
COLORADO SPRINGS, COLORADO

City of San Mateo
LED VMS SYSTEM
8" 18x030 Full Matrix

SIZE	DWG. NO.	REV.
D	12S–XX0000–01	A
SCALE	SHEET 1 OF 1	

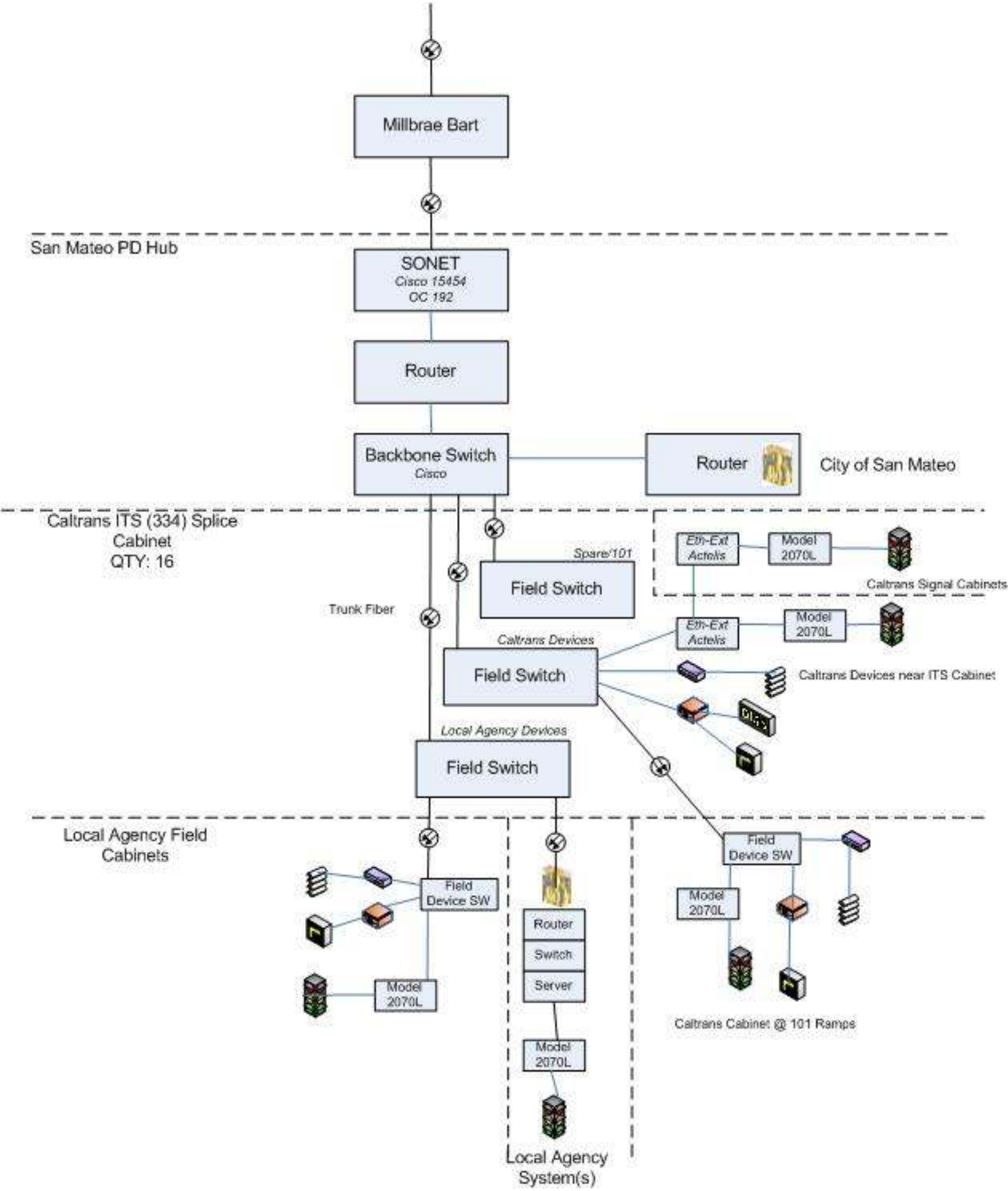
Millbrae Bart
San Mateo PD Hub
SONET
Cisco 15454
OC 192
Router
Backbone Switch
Cisco
Router
City of San Mateo
Caltrans ITS (334) Splice Cabinet
QTY: 16
Spare/101
Field Switch
Eth-Ext Actelis
Model 2070L
Caltrans Signal Cabinets
Trunk Fiber
Eth-Ext Actelis
Model 2070L
Caltrans Devices
Field Switch
Caltrans Devices near ITS Cabinet
Local Agency Devices
Field Switch
Local Agency Field Cabinets
Field Device SW
Model 2070L
Router
Switch
Server
Model 2070L
Local Agency System(s)
Field Device SW
Model 2070L
Caltrans Cabinet @ 101 Ramps

Traffic Signal System Data Paths
D4 Server Option

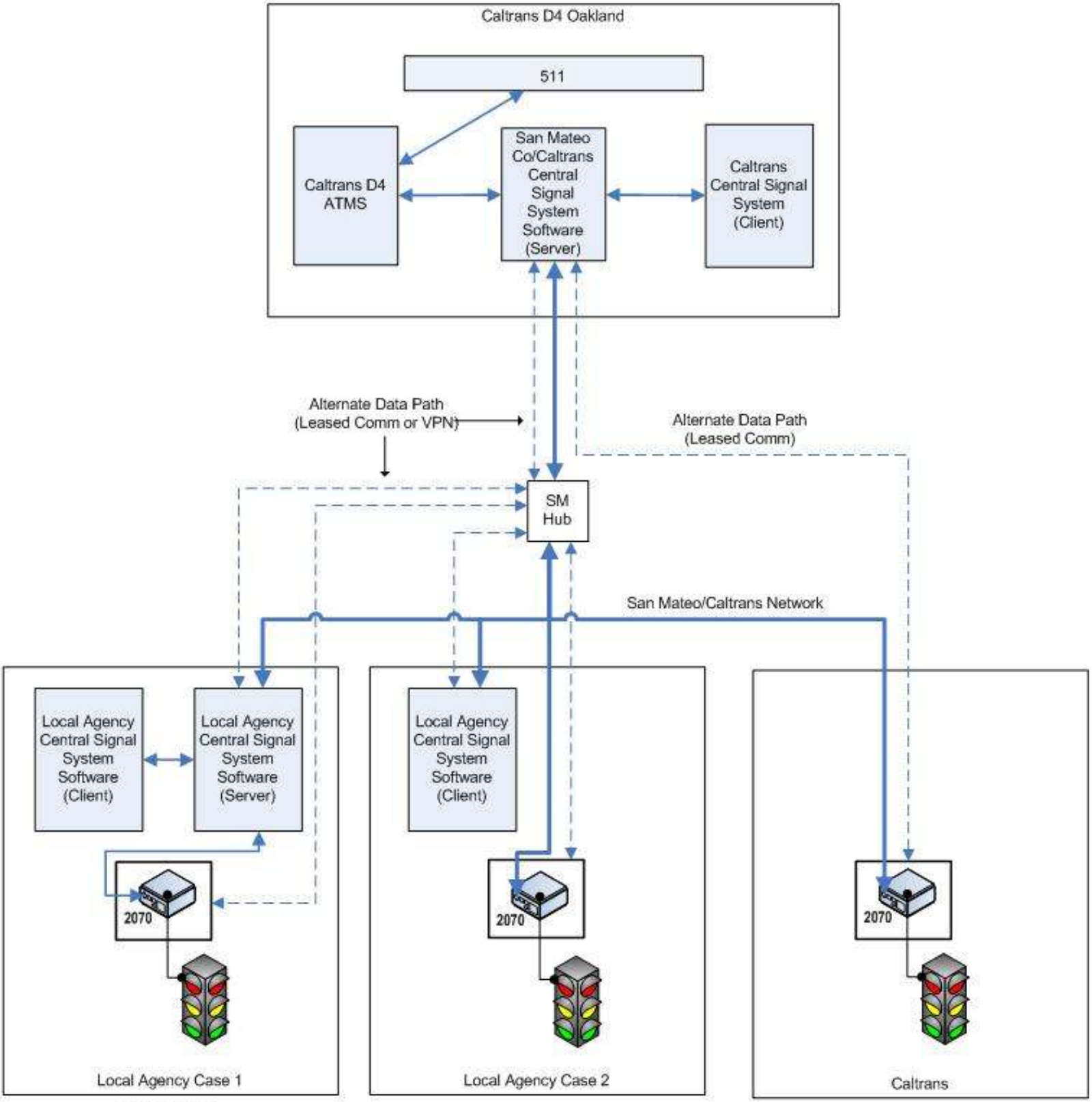

Burlingame
* San Mateo
San Bruno(SSF)
Redwood City
*San Mateo Server @ Hub

Millbrae
Belmont
San Carlos
San Mateo Co